Data Sheet

Article number: 543016121
Description: LDK Rod end SPHS 12ECL
Stainless steel, threaded left

Measures

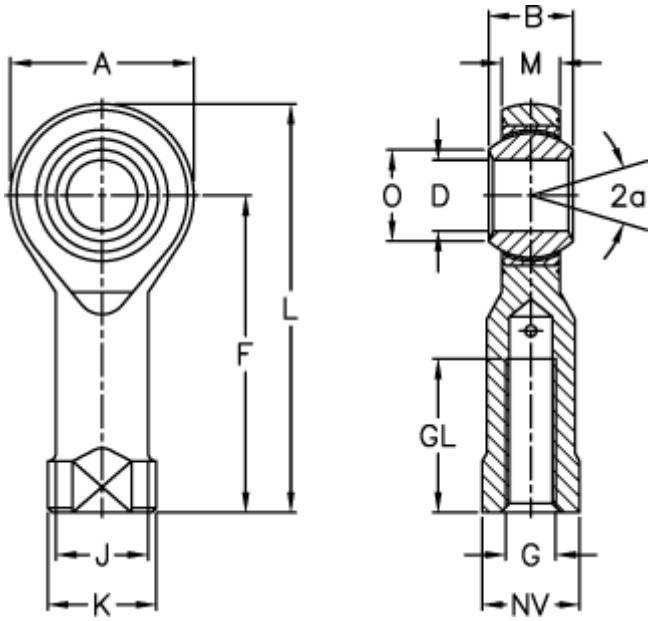

A	= 30	J	= 17.5
a (degrees)	= 13	K	= 22
B	= 16	L	= 65
D	= 12	M	= 12.00
Dynamic load C (kN)	= 14.0	NV	= 19
F	= 50	O	= 15.4
g	= M12	Static load C0 (kN)	= 26.7
GL	= 24	Weight (g)	= 107

Product drawings and brochures of any kind may contain errors for which Brd. Klee A/S cannot be liable.